CHAPTER 7

REDESIGNS TO SMOOTH STRESS DISTRIBUTION

As shown in figure 7.1, steering matrix has a stress distribution in its rib that presents a high concentration along the rib.

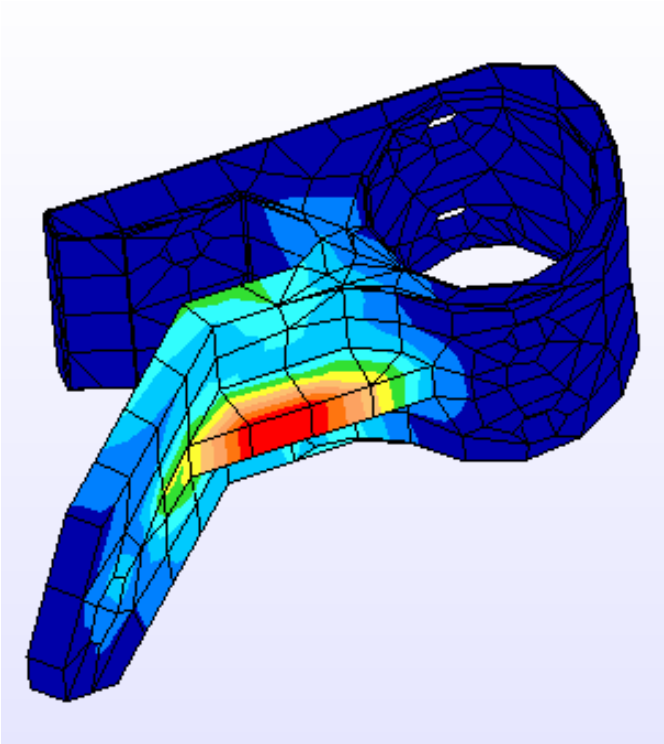

Figure 7.1 Stress distribution in steering matrix.

Major concern of this chapter is to find a geommetry for the steering matrix that smooths the stress concentration in this part.

7.1 First redesign: spheric-type reinforcement

Figure 7.2 illustrates the trial geommetry to reduce stress concentration in steering matrix.

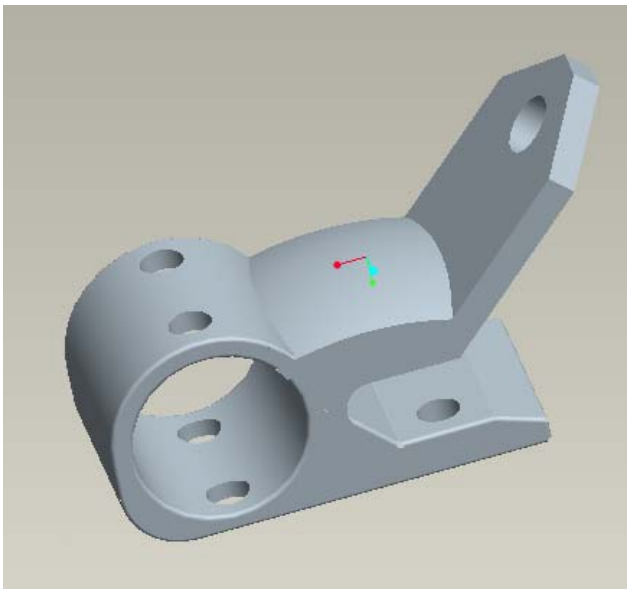

Figure 7.2 First trial geometry.

Stress results under Von Mises criteria are shown in figure 7.3.

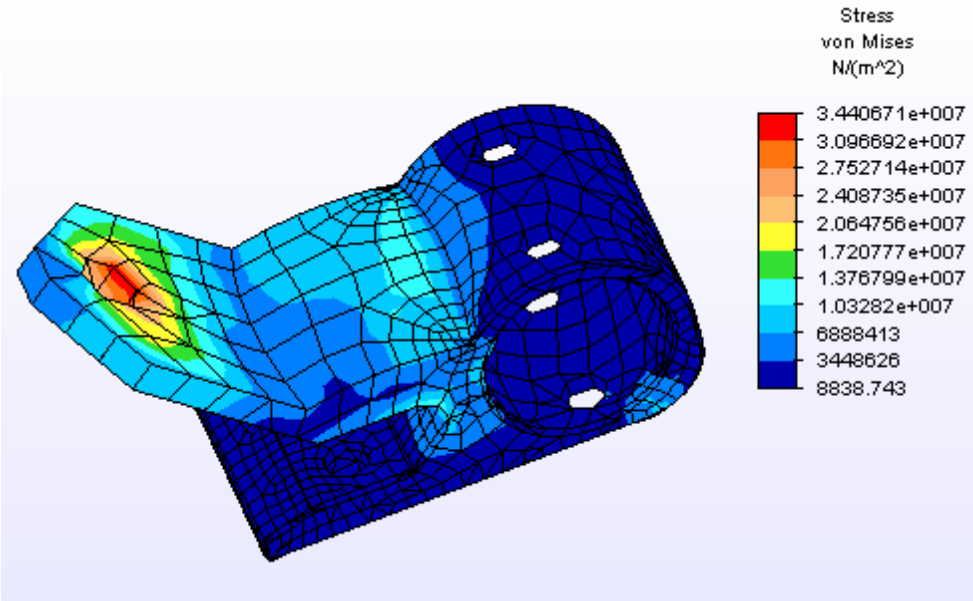

Figure 7.3 Stress distribution in first trial geommetry.

Stress distribution was smoothed in the curve profile of geometry, where maximum stress value is1.3 E7 Pa, versus the 4.3E7 Pa from results in chapter 4. However, stress

concentration in steering hole was increased from 1.7 E7 Pa in chapter 4 to 3.4 E7 Pa in this trial. Figure 7.4 shows a view from the other side of profile.

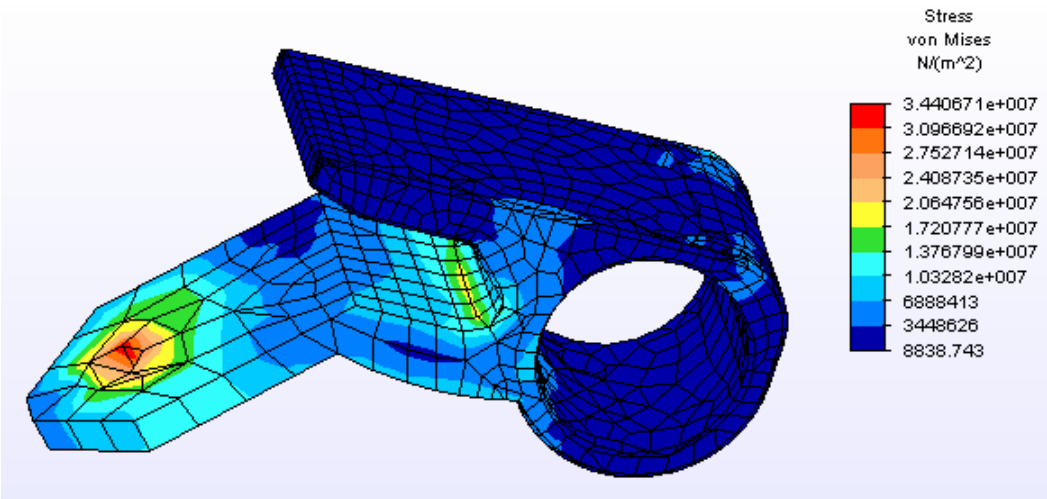

Figure 7.4 Stress distribution detail in front side.

7.2 Second redesign: rounded diagonal rib.

Figure 7.5 shows the central rib added to geometry.

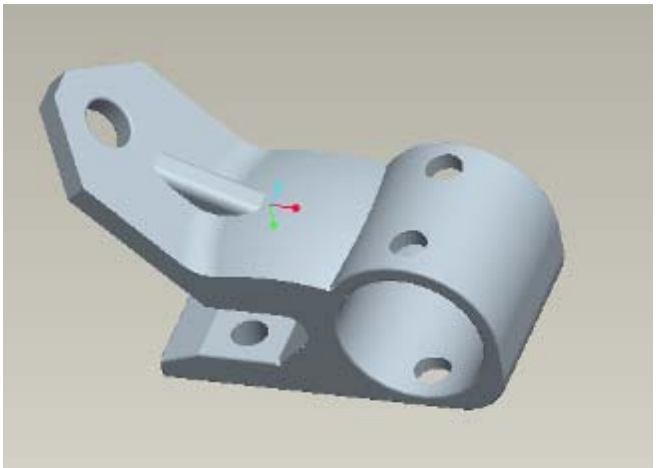

Figure 7.5 Second trial geometry

Figure 7.6 shows stress distribution under Von Misses criteria for this trial.

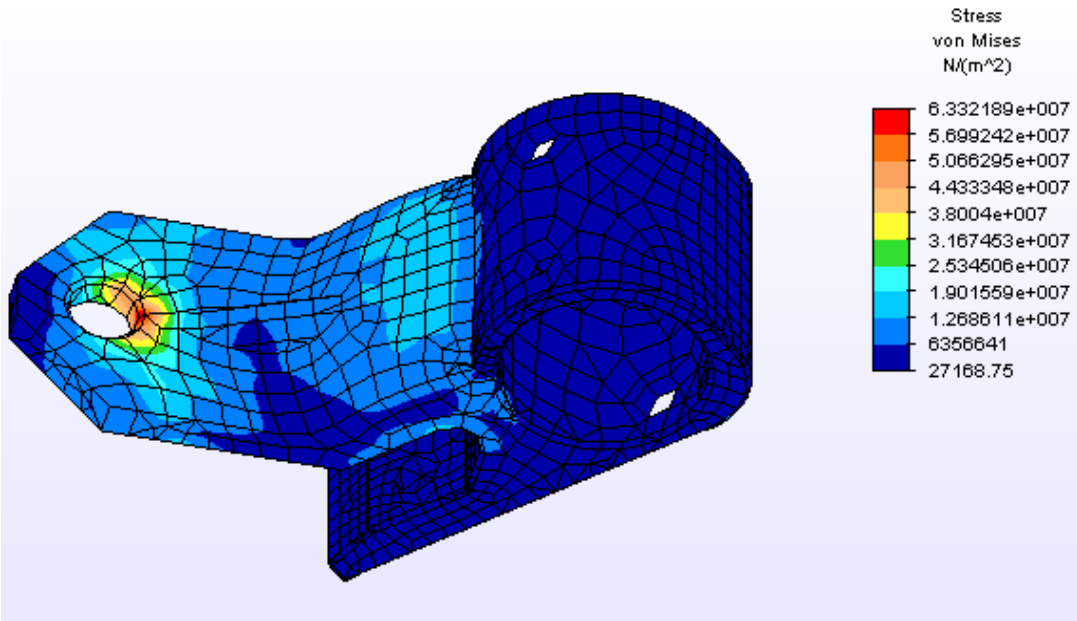

Figure 7.6 Stress distribution for second trial geometry.

Central rib seems to have increased stress concentration in hole. Furthermore, maximum stress value was increased to 6.3 E7 Pa, just over the limit fatigue stress for aluminum 6061 of 6.2E7 Pa. Figure 7.7 shows other view of stress distribution.

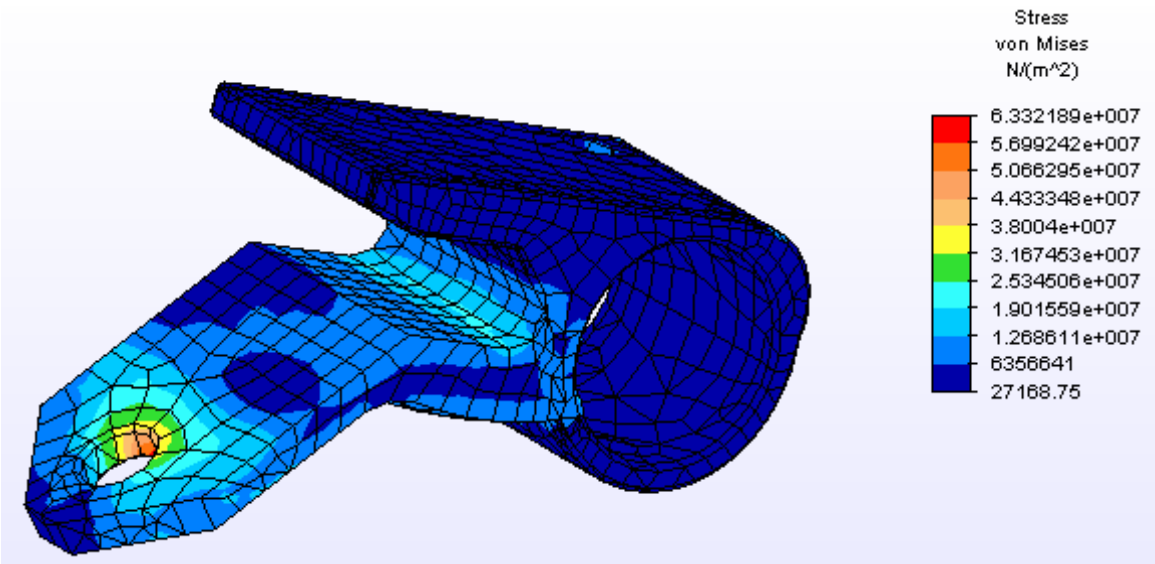

Figure 7.7 Other view for stress distribution in second trial.

Maximum stress in curve profile was also increased to 2.3 E6 Pa, so the central rib will be discarded for third trial.

7.3 Third redesign: removing material

Figure7.8 shows geometry with hole features located near high stress concentrations.

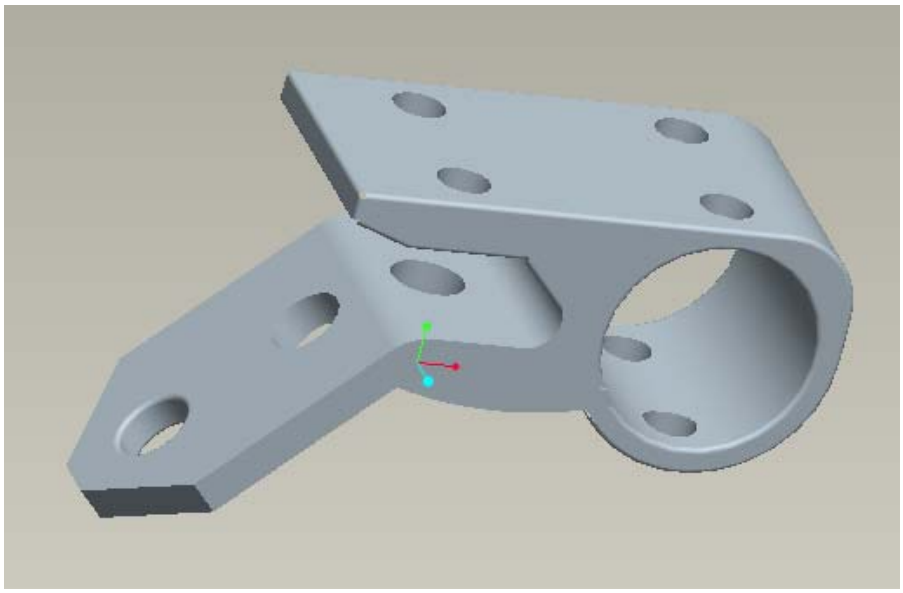

Figure 7.8 Third trial geometry

Figure 7.9 and 7.10 show stress distribution for this trial. Again major point of concern is steering hole with a maximum stress of 4.6 E7 Pa. Spheric profile shows an even stress distribution, having a maximum value of 1.8E7 Pa.

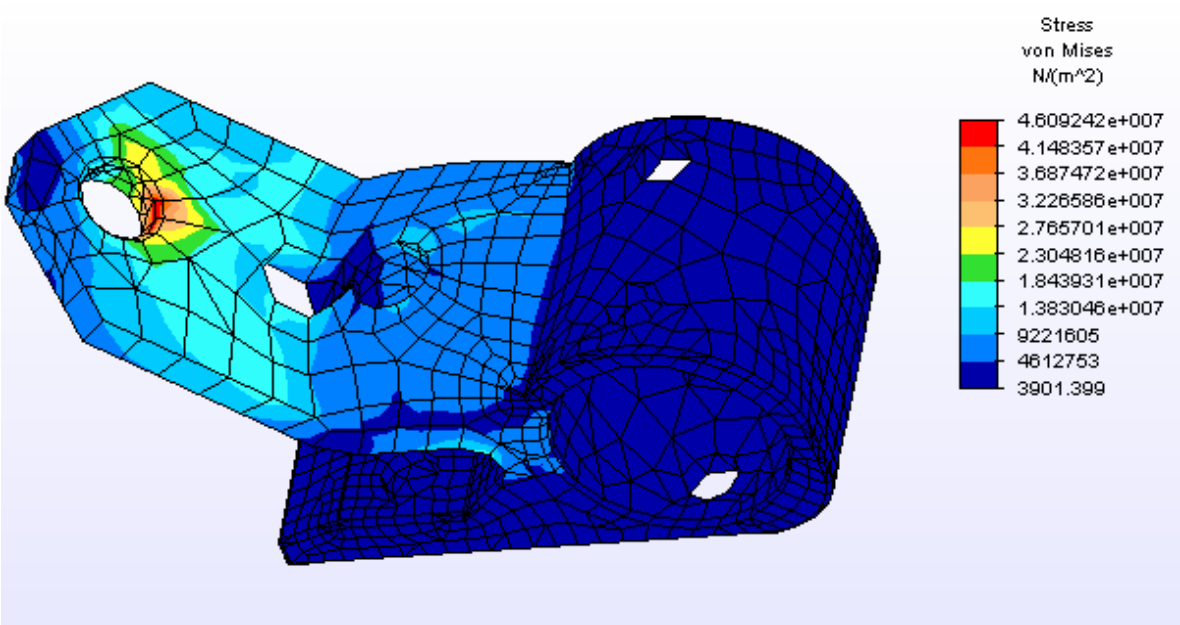

Figure 7.9 Stress distribution: third trial

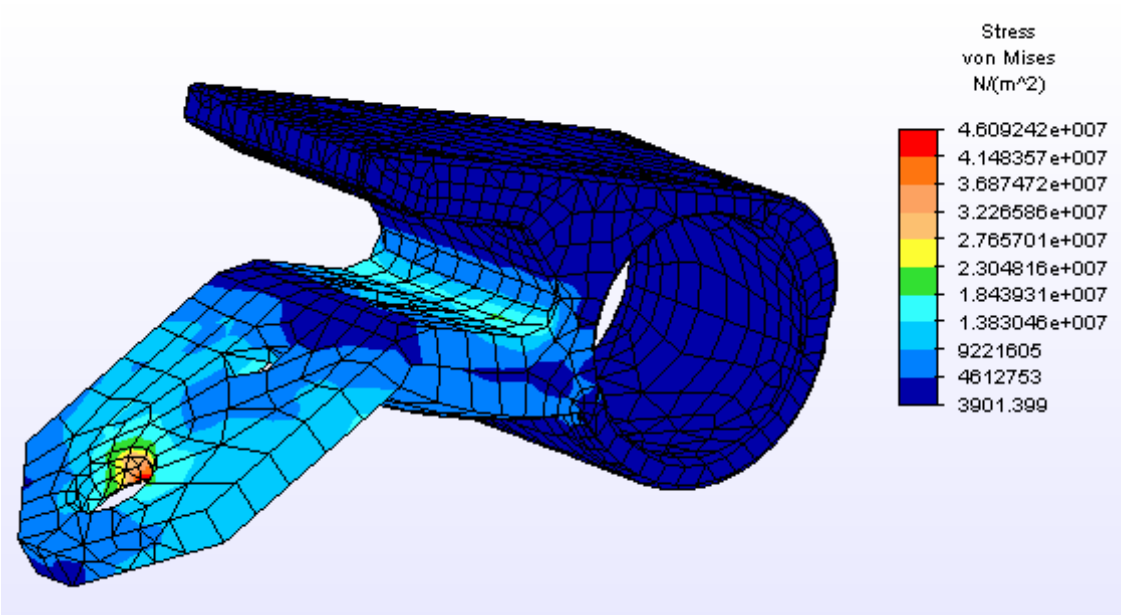

Figure 7.10 Stress distribution: other view.

7.4 Main results in redesign.

This evolving-feature redesign and FEM analysis shows that:

- Stress concentration can be lessed by increasing cross sectional area and avoiding straight edges (e.g. spheric profile).
- Rib seems to increase stress concentration values if located in line with steering hole.
- Material removing can smooth certain stress distributions and reduce maximum values.

7.4 Main results in redesign.

This evolving-feature redesign and FEM analysis shows that:

- Stress concentration can be lessed by increasing cross sectional area and avoiding straight edges (e.g. spheric profile).
- Rib seems to increase stress concentration values if located in line with steering hole.
- Material removing can smooth certain stress distributions and reduce maximum values.