CHAPTER 9

CASE-STUDY

9.1 Introduction

When the Tlaxcala site was acquired 5 years ago, A&B didn't exactly know what it was facing in terms of global standards implementation as it does in any of its hundreds of facilities worldwide. It was facing a completely new challenge dealing with a culture that has some rather peculiar traits of its own and that pose the need for the development of proactive strategies that will lead to the success of the business.

Sometimes companies tend to think more about globalization and tend to forget that localization is also an important part of. What has proven to be effective in point A, may not necessarily be so in point B, or at least, it may not work in exactly the same way, that is nothing more than a utopia. Something quite shocking is that mainly due to cultural and some other differences among these places, the easiness with which things are implemented and how successful they get to be, can vary considerably even within the same region.

This particular A&B site in the Tlaxcala region, in central Mexico, has provided a great example about localization as a globalization tool. One of the biggest challenges of the different plant managers that this site has seen during the past 5 years has been to adapt the company's global standards into this tough and resistant culture that is very proud of its cultural heritage. Tlaxcala itself, although the smallest state of the country, possesses a huge historical background that has survived, almost intact, several hundred years after the Spanish conquest. As Tlaxcala and its people were granted certain distinctive privileges by the Spanish crown for their collaboration into destroying the Aztec Empire, they grew to

believe themselves as a country of their own, different to all the other ethnic groups that surrounded them.

Fig. 9.1 Geographical Location of Tlaxcala (Microsoft Encarta Atlas 2000)

Even nowadays can this pride be perceived and still standing in the way of many efforts to try and bring Tlaxcala under the full extent of the globalization advances. Not that they haven't seen it coming, but there is still some reluctance, unconscious as it may be, to jump onboard the worldwide efforts that recognize no frontiers, may them be geographical, political or cultural.

In a town with such peculiar characteristics, it is quite intriguing to see how a company that has business operations in over three-quarters of the globe, has come to develop local strategies that need to be inclusive of the culture of its nearly 500 employees, most of them natives of this region. Maybe, one of the most challenging issues regarding the difficulty with which global standards have been successfully implemented relate to the

fact that this is an acquisition site, and according to Hofstede, an acquisition is one of the most problematic of all the globalizing strategies that a corporation can choose to follow because it rarely takes into account the terrible cultural issues that come along with it. The foreign company that takes it over will not only buy the facilities and equipment, but also a different organizational culture which is a result of the host country's culture. International acquisitions are definitely a fast solution for expansion, but the cultural risk that they represent is extremely high and should be therefore handled very carefully. As long as the decisions about international acquisitions or takeovers are still in the hands of the Finance departments of the corporations, without ever integrating other departments that may have a different point of view in terms of how to avoid or smooth out cultural issues, the uncertainty regarding the success of the acquisition will remain quite considerable (Hofstede, 1997).

This site used to be run by a powerful Mexican corporation that used to do business in the old-fashioned way, a very Mexican old-fashioned way. Back then, people were not treated with the absolute respect to their dignity as A&B considers they should be. The paycheck depended on how close one was to the manager and so did one's promotions; public denigration was not unusual but what is really shocking is that people seemed to like it that way. This comes from way back, as a major political influence of the Colony and the last dictatorship. It is worth mentioning that this is still quite often seen in the public administration, power and influence are proportional to one's closeness to important government officials, which is not really that hard to achieve in such a small state. Socially and politically speaking it is so much easier to establish a work or personal relationship with high government officials than in neighboring Puebla, where due to a bigger population; this closeness tends to be diluted. Nevertheless, one can still hear the chit-chat

in the hallways about how great the old times were, how they miss drinking and sleeping in the workplace, even though sometimes 24-hours shifts were not unusual and wages were well below average. As odd as this may seem, it is true and as mentioned already, it has a historical background. What they might have felt like back then is just the same as what they felt during the Spanish rule, in which, as "privileged" as they were, the work conditions under which they had to live and die were terrible. One can hear all kinds of nasty stories about what people did to each other, the boss to the subordinates or even among team members, one would say that those were not lucky days, but apparently they were so for them.

When a company that considers its employees at levels as its most valuable assets gets to this place, with values and principles to work upon and that actually gives the employees the right to own a part of it through interesting stock-option plans, you all of a sudden encounter a feeling of distrust, of extreme resentment, and the reason for that is mainly that the company is not of regional, not even Mexican origin. Tlaxcala still feels betrayed by the Spaniards. The love and hate relationship that existed among the two of them is a major discussion topic over which no more time will be spent, but it has to be taken into account for analyses purposes of the current situation at this manufacturing site.

9.2 Corporate Standards

A&B adopted TPM almost a decade ago under the name IWS, which stands for Integrated Working System. What it is based upon, besides TPM principles, of course, is the generalized idea that working together, as a highly effective and performing organization, will lead to outstanding business results through productivity, quality, safety and the logical

financial benefits that derive from them, which in turn is shared with all the organization's members as a highly motivating action.

A&B's nervous system is called PVP, which stands for Principles, Values and Purpose. Every single decision made on no matter which area of the organization has to abide to the PVP, no policy or rule is more important than this set of no more than three pages. They are on public display all over the facilities as a constant reminder of how the organization is expected to conduct itself at all times. The HR department is responsible for counseling all the employees in case they suddenly find themselves in a conflict of interests regarding PVP or IWS, and if necessary, it will provide the psychological or legal assistance that might be needed. However, the company greatly encourages all employees to have a first approach on PVP or IWS issues with one's supervisor or manager. If he or she feels that more help is necessary or that the issue is well beyond his or her scope of influence, then the HR resources may get a call, of course. A crisis team is always on call through mobile phones.

Continuing the analogy to the human body there are the heart and lungs which would be the IWS. The circulatory and respiratory systems may only work on their own as long as there is still brain function. Once it has stopped, a mechanical survival may be accomplished but it is doubtful that any improvements would be made, this is exactly what happens with IWS. Unless it is performed accordingly to the PVP guidelines, it is useless, from the point of view of the company.

Once there is PVP plus IWS, the result is a successful business with successful members whose constant feedback (which is highly expected) to the organization itself makes tremendous improvements that have ongoing and consistent results at all levels. However, not everything is perfect, here and there may it encounter difficulties which need

to be solved and fixed from their root causes and that are precisely what IWS helps the company do. It establishes a detailed and meticulous method to address any issues that corrupt or hinder in any way the integrity of the organization. IWS consists of 8 pillars that firmly support the organization, such pillars are:

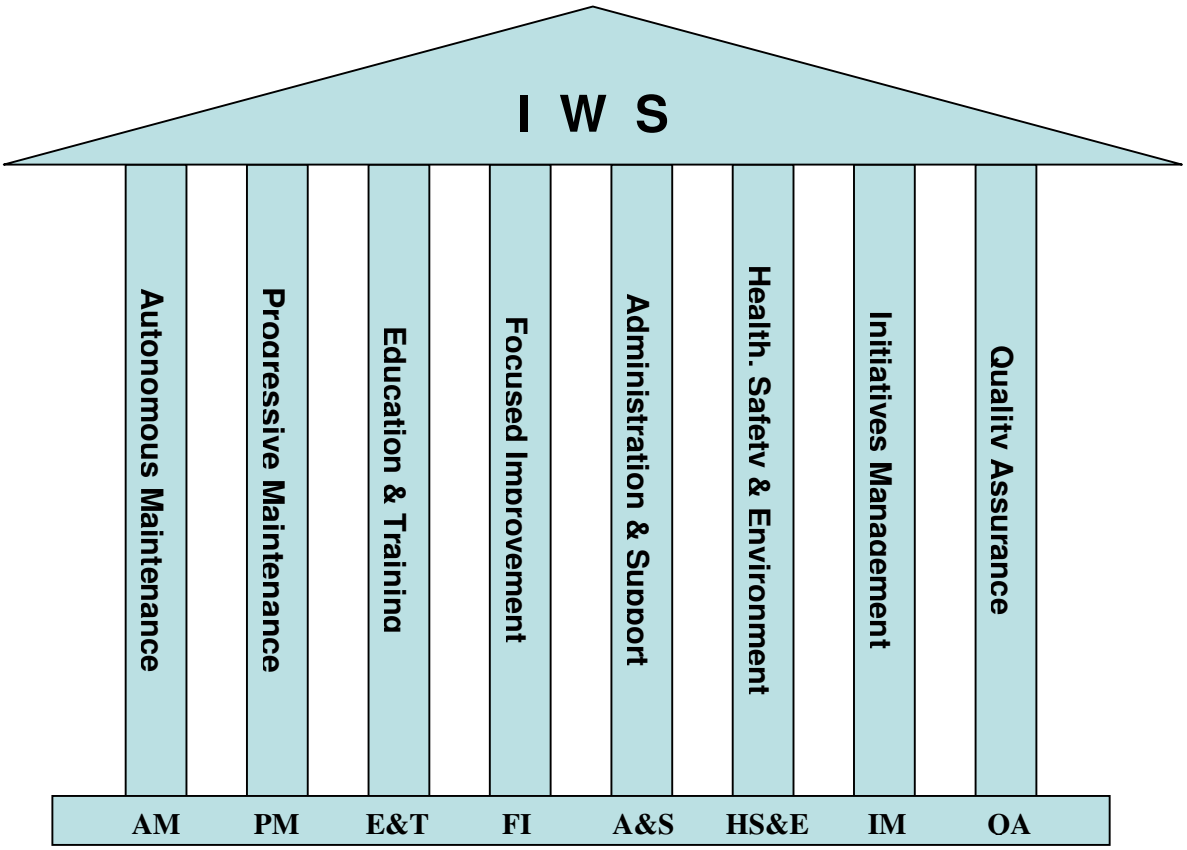

Fig. 9.2 IWS Pillars

IWS information is also widely displayed throughout the site in IWS boards that show case-studies, promised savings by areas and updates about particular projects. IWS information is available for everybody at the HR offices and the pillar owners have the duty to give information about their pillars to whomever, within the organization and with a valid need, ask for it. IWS is there for all those that want to know more about it and how to obtain better results in their areas through any of its tools and methodologies.

Through the coordinate interaction of these 8 pillars, the organization knows exactly how to achieve the challenges that it encounters. Each pillar has an individual working approach that seeks to address specific needs and concerns of the different areas that constitute the corporation. It is important to underline the fact that IWS is implemented in all areas, from R&D, manufacturing facilities, human resources, finance, etc. That is why it is called Integrated Working System, because it takes into account all the needs of the organization and uses all the resources available all through it to address them, thus having a constant internal growth that reflects clearly in its stock performance during the past years.

9.3 IWS into Technology Transfer Projects

When one buys a new sound system for the living room, it is expected it to be problem-free at least during the first few years, but should one really pretend to forget about taking good care of it and just use it until it shows the first signs of wear and tear? Very doubtfully would the answer be a yes. In order to increase the productive life of such an item there is a need to keep it at least, clean and in a dry and cool place, otherwise it will certainly start to show one problem after another.

This is exactly what happens with brand new machinery when it is installed in a manufacturing plant of any kind. It is expected to be useful and allow the recovery of the usually enormous investment in a rather short or at most medium time span. Nobody wants to worry about it being all of a sudden out of service for one reason or another, and that is exactly why all the proper preventive actions must be taken before it is actually up and running. The effort to increase the useful life of any machinery or piece of equipment starts at the design desk with the active participation of all of those who at some time will be

involved with such an item all through its life cycle. In this way a concurrent engineering project is encouraged to be developed and adding up the appropriate working standard such as those proposed by IWS, the outcome must certainly be a vertical start-up with no quality or safety issues to worry about for a long time.

9.3.1 Description of the Project

The project that constitutes the topic of this case study is the upgrade of a 20 year old paper machine. The goal is to make it produce a lower cost product at a higher rate to satisfy the demand of the following step of the supply chain, which is the paper-converting area. This paper machine which will be referred to as PM 7F produces toilet paper that is converted later on, into a leader brand toilet paper sold in many countries. For years it has been able to produce this paper with a different mixture of fibers than that of a neighboring machine, PM 8F, due to technical limitations. This difference in composition increased the cost per ton of paper in more than 40%, which obviously constituted a major financial problem for the site but due to supply needs, there was no other choice than to work in this way.

Some months ago the decision was taken to upgrade PM 7F to make it possible to use the same furnish as its neighbor and by the way, increase its production rate by 45%. A group of experts from the US headquarters and the site was gathered to analyze the possibilities that were available. Many factors were taken into account, such as delivery times proposed by the suppliers, overall cost, technical feasibility, human resources availability, risk level involved, etc. By no means were issues such as cultural differences considered into the decision making process. After thorough discussions back and forth a decision was made to choose an Italian proposal as the winner. Pastra, a paper-making

supplier and consulting Italian company with around 20 years of experience was granted the rebuild contract for PM 7F for 7.5 million dollars.

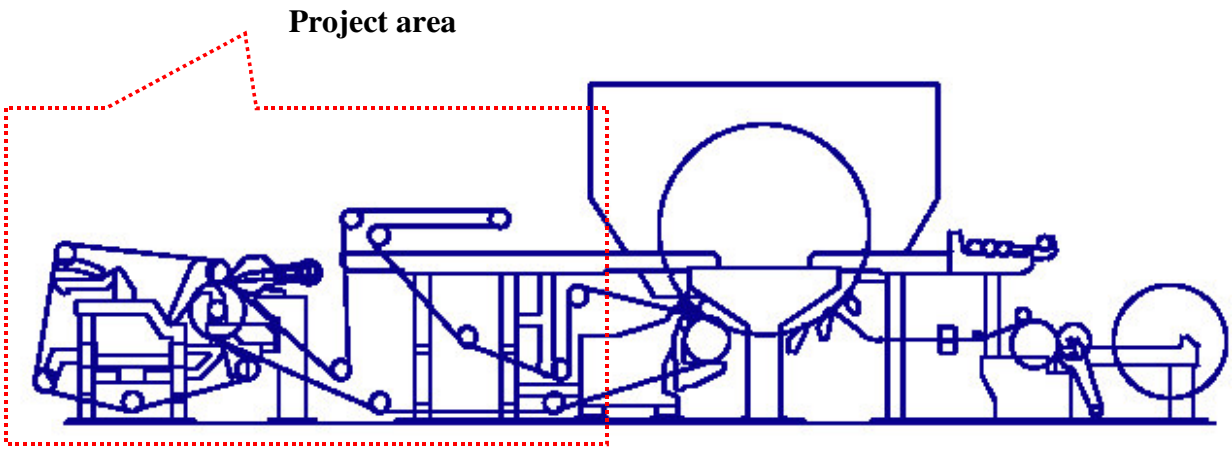

Fig. 9.3 Layout of a Conventional Tissue Paper Machine.

After even more serious discussions among the engineering, production, finance and shipping departments, a schedule for the project was developed. Due to supply needs, PM 7F would not be able to stop operating for more than 10 days, beginning in early March 2003. Its production would have to resume at an even higher rate after all the modifications had been done in order to reduce to a minimum the financial impact of the project in terms of production loss. Whenever the paper machines are not able to supply all the paper needed to satisfy the product orders, the site has to import paper from its sister sites in South America at an astronomical cost, more than 25% over the on-site paper production cost.

This major business decision gave Pastra their first opportunity to get a first row seat insight of what the A&B world is all about. This Italian company was chosen for a number of reasons that made the deal attractive for both parties. Although most of this

information is highly restricted, an authorization was granted to mention the following points as examples of what kind of criteria was established to reach a final decision:

a) reasonable delivery cost for the scope of the project. Pastra's offer was more than 30% less expensive than that of another two European suppliers. This made the recovery time shorter and thus more attractive for the company.
b) compliance with a tight project schedule. From scratch, the project didn't last more than one year. Additionally, the company established an 11 days window in its production operations to dismantle and rebuild PM 7F. The two other suppliers were not willing to commit to such a tight schedule. They additionally agreed to a 1% penalty fee for any delay for which they were held responsible, this percentage was to be applied over the final bill.
c) free access to the manufacturing facilities in Italy for supervision purposes at any time.
d) wide range of human resources available on call at no extra charge on site with expertise in several areas to cover all the possible scenarios that could arise during design, manufacturing, construction, start-up and testing.
e) twenty years of experience in the paper making industry

In order for this serious challenge to be feasible, all the necessary precautions and risk avoidance actions needed to be followed according to IWS standards. No mistakes were to take place under no circumstances. This is why the design process was so detailed and involved both the supplier and the engineering and manufacturing teams of the company.

A series of clear IWS goals were expected to be delivered at the end of the project. Such goals were:

1) PM 7F would have to be delivered in step 3 of AM in order not to fall behind the rest of the site's machinery

2) PM 7F would have to be delivered in step 2 of PM for the exact same reasons

3) The project would have to include a thorough and meticulous E&T process that certified the skills and abilities of all the operators and staff personnel as experts of the new technology that was going to be implemented. An appropriate record of the training process was vital for the success of the project that could serve as benchmark for the rest of the organization in terms of the E&T pillar activities.

4) Zero losses related to the project in general, may them be in terms of leakages, quality defects, safety incidents, minor and major stops. etc.

The 8 pillars of IWS can help in one way or another to accomplish this four main goals but a close following of each of their guidelines and recommendations would have to be carried on. For this purpose, a highly effective work distribution to the most appropriate elements of the organization was a must. Each person would then have to gather his or her own work team to achieve the objectives set forward to them. A strong leadership attitude along with effective communication skills in both English and Spanish were basic requirements to assign the different roles. People from other areas of the site were invited to the project, which required a superb organizational ability (supported by A&S principles) in order to take care of both their own area's chores as well as the PM 7F rebuild project.

Among the different teams that were organized we found the following, along with the detailed specific goals to be delivered:

1) **Safety**.- make sure that all the necessary precautions were taken to achieve a goal of zero safety incidents/accidents all through the project's execution. This includes safety training sessions for the contractors and suppliers, making sure that everybody wore their PPE at all times, supervising the execution of safe working practices, etc. Making sure that all safety defects are first on the priority lists.
2) **QA validation processes**.- making sure that the product complies with the corporate specifications and that all the proper documentation is kept and signed by the appropriate people; keep track of experimental orders and sign the final authorization to start normal production batches.
3) **AM**.- provide all the necessary support to identify and correct all kind of defect; give a refresh training to the work teams in steps 1, 2 and 3 of AM; supervise the development and implementation of CIL charts; implement visual controls.
4) **PM**.- make sure all the med files containing the birth certificates of every new piece of equipment is available; check that all the spare parts are assigned a code in the warehouse to make easier their purchase and tracking; validate the CIL charts and visual control standards.
5) **Training**.- update the skill matrix for the area including all the new machinery training requirements; certify the assigned instructors; keep track and record of each training session of the project.
6) **Costs**.- develop the project's budget and obtain authorization from the company to spend it; keep track of purchase orders and material requirements to maintain a daily balance of the budget; making sure that the suppliers and contractors deliver their goods and/or services on time.

7) **Engineering**.- providing the technical expertise necessary to meet the expectations of the company in terms of production; validating all the drawings and filing them in the corporate database; take over the control of the project execution during the construction and installation stages.
8) **Production**.- carry on the pre start-up and start-up checks; train the operators on the new technology; give all the necessary support to the AM team

Each of them had a very specific goal to achieve, but at the same time they had to interact among themselves to do so. Communication, leadership and trust are key elements that make this possible, along, of course, with the PVP that guarantees that all decisions made are aligned with the company's expectations. In all, there were well over 65 people working full or part time in this project, at a cost of close to 100 thousand dollars in just man time hours. The interaction of people from the corporate headquarters in the US, as well as some experts from different sites, plus the supplier's people from Italy and the Mexican team was marked by strong cooperation and task-delegation. Here is how the integrated project team looked like:

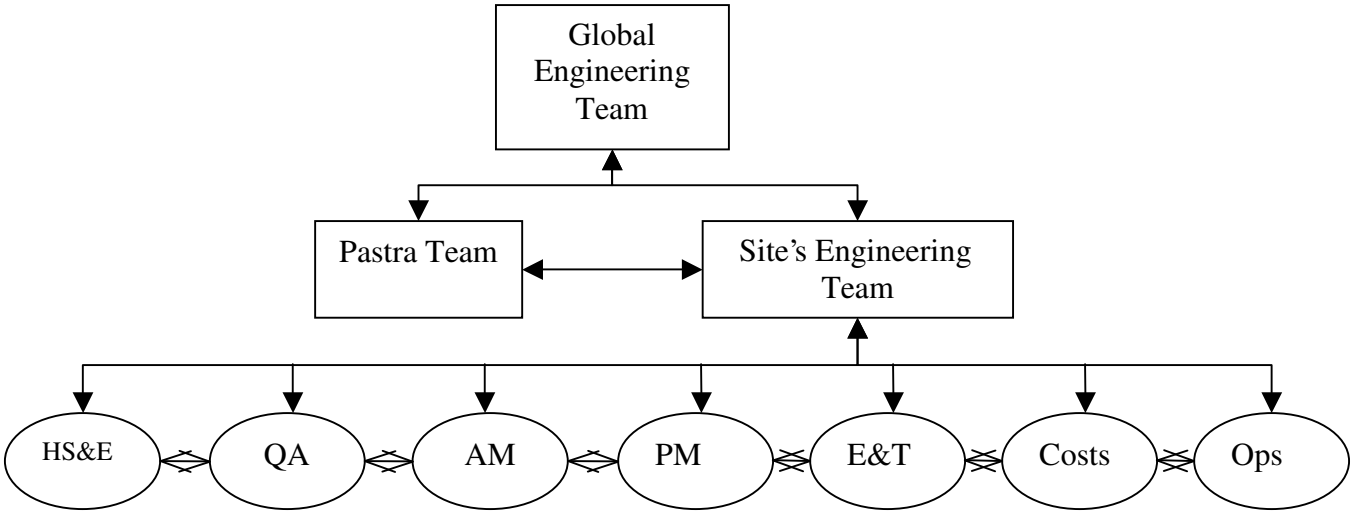

Figure 9.4 Structure of the PM 7F Project Team

There were moments of high tension of course during the whole project, from design to start-up, but everyone tried to keep a focused attitude at all times, since the whole project team was pretty well aware that the future of the site depended on the success of their work. Millions of dollars were put at stake and no unfounded risks were to be taken.

The different approaches that the Mexicans, the Americans and the Italians followed during their jobs were completely radical, from the interpersonal relationships established, to the engineering standards of common use, and needless to mention, the constant struggle between those who preferred SI or English units. Of particular interest results the fact that the Italians hate to use their personal protective equipment (PPE) on the floor, which arose severe discussions with the Americans that considered that to be a suicidal attitude, while most of the Mexicans just tried to ignore them both and mind their own business.

9.4 Cultural Factors that Affect IWS Implementation

As an outcome of the research project it is now possible to identify several factors of cultural nature that stand in the way of IWS standards implementation in projects such as the one that was chosen.

What was really notorious all through the development of the project was the actual cultural differences of the three nationalities involved. While the Americans wanted to do everything strictly abiding to guidelines and checklists and scientific statements, the Mexicans were more likely to express that paper-making is not a science but more a craft that follows very few scientific principles, while the Italians were eager to finish everything up as fast as possible without paying much attention to details.

The language barrier also played an important role in this project. The only language in "common" was English, of course, but the proficiency levels of some Mexicans and some Italians was really, really poor. Imagine a discussion in poor English between people whose mother tongue is either Spanish or Italian. Sometimes the outcome of these common discussions was catastrophic in terms of what each of them understood, which turned out to be exactly the opposite of what they thought. It wasn't uncommon at all to have three different groups of people discussing in their own languages during the same meeting, which needless to say, lasted forever and barely had a truly substantial outcome.

Focusing a little bit more on the Mexican team assigned to this project, what was found is not at all surprising, considering the general characteristics of the Mexican people and particularly those of Tlaxcala's. In IWS difficulties terms the great reluctance of the Mexicans to document all their work is to be highlighted.. They feel no need to write down what he or she has done because he or she is afraid that someone can come and steal it. If

he or she keeps it in his or her mind, a sense of job assurance is experienced. One may try to figure out what crosses through their minds in those moments: "if nobody else than me knows this or that, I'm essential for the company so they can't let me go." In the modern corporate world no one is essential for nobody else. Trying to get them keep records of trials, training sessions, meetings information, safety incidents, action plans followed or to be followed, quality incidents, etc., is nearly impossible. IWS considers that if something isn't written somewh ere, it is non existent whatsoever. Here is therefore where IWS strikes its first major obstacle, definitely a major challenge for the A&S pillar.

9.5 Blend of Technical and Cultural Factors that Affect IWS Implementation

One thing that is perfectly sure is that the technical capability of the Mexican worker has been underestimated, or perhaps not fully understood yet. If something is true about the Mexican shop floor worker is that he or she will provide a quick and creative solution to a certain operational problem. Most probably this solution will be based neither in engineering principles, nor in the desire for long lasting efficiency.

When a Mexican worker spots a problem that is truly bugging him, he will make use of whatever is within his hand reach to try and solve it. Nowhere else can one actually witness how magical and useful may "wood welding" be. Wood welding is rather simple, but very creative whatsoever. It consists of a little chunk of wood that is inserted into a punctured pipeline to stop the leakage. How long will it last? How aesthetic it looks? This is difficult to answer, but it sure helps in the moment where the problem is critical. Very often this is done to provide time enough to go with their supervisor or manager and try and look for a better solution.

Although the Mexican worker in general tends to be quite obedient, those native of the Tlaxcala regions will eventually do what they are asked for, but not before seriously complaining about how their daily schedule or work load is affected by out of the ordinary tasks. They will try and do a good job provided they have clear directions, and even in those cases; they will finally end up doing something they believe is better than what they were told.

This creativity is sometimes very useful, but others it can be very harmful, especially when it is used around highly sophisticated and expensive equipment. Add up the possibility of it being new equipment about which nobody really has yet a good understanding and knowledge, and things can become very complicated. When a new machine gets to the plant, the natural human curiosity that everybody shows leads people to start peeking, moving, tightening and even removing parts to see what it looks or behave like. In this site there was a need to put the project's parts into a restricted area under 24-hours surveillance. Nobody wanted curious mechanics and electricians to be playing around with valves, motors, rolls or drives. The natural creativity of the Mexicans can be obviously greatly exploited, as long as it is done under controlled circumstances. It can be focused to solve specific problems through the kaizen methodology. A kaizen is a modification to the current setting that will solve a particular issue, allowing a better operation, maintenance or inspection. They are documented and validated by the PM team. Extraordinary kaizens can compete for an award. By these means the creativity is used productively for long lasting solutions that comply with the company's regulations and standards and leaving no place at all for lucky outcomes or unfinished attempts.

It is obvious that this site has people willing to learn, but learn by experience, they are not interested into long boring theoretical E&T sessions and are very reluctant to attend,

of course, that is not a matter of choice, if they've got to attend they will have to do it, not that the actual attendance really has a positive result. This is why the project must include a series of hands-on training activities that are more interesting to attend and that could definitely result much more useful.

Technically speaking one tends to think of equipment designed, developed and built abroad to be quite reliable and a true representative of the state-of-the art engineering advancements. However, and just to mention an example, there might be some basic ergonomic characteristics that make such an equipment difficult to operate, inspect, maintain, install or repair. When such things happen, there won't be a right foot start, and this may just be the beginning.

For example, during the installation of some pieces of equipment in the rebuild of PM 7F it turned out that in general most of the lubrication ports were 17 cm above the average height of the mechanics assigned to PM 7F, eight in total, with an average height of 1.64 m, putting the inspection ports at approximately 1.84 m. What this implies is that the 56 lubrication ports that the machine has will require a 20 to 25 cm hose to be attached to in order to perform this operation easily, at a cost of:

- 14 m of lubrication hose at a unit cost of 75 MXN/m or 6.93 USD/m* equal to 388 USD
- 2 mechanics working 8 hours at t a cost of 3.15 USD/h equal to 50 USD
- 56 hose connections at a unit cost of 17 MXN/pc or 1.57 USD/pc* equal to 83 USD
- Grand total = 521 USD

* An exchange rate of 10.82 MXN per USD was used for this calculation.

It may certainly not represent a lot compared to the 7.5 MMUSD that the project was set at, but it is a sufficient amount to buy more than one ton of virgin fiber to make it into paper. As minimal as this issue may seem, it still represents a loss. This loss could and should have been prevented during early stages of the design process because the supplier should have thought about the needs of the people that were going to actually operate the equipment. The human effort wasted in fixing this problem could have very well been used in more productive IWS activities such as visual controls implementation, new equipment documentation, etc.

This is an example of how the company can find tiny little losses that add up to several thousands of dollars that it can very well invest in many other things. It is evident that fixing these design flaws requires tough work to be done, which is nothing more than wasted effort that prevents the timely implementation of many IWS standards.

There is evidently much more about how the cultural characteristics of this place interact with the technical capability of the people, which in turn affects how IWS can be implemented in the shop floor. For instance, it has been mentioned that the workers tend to be quite frank and obedient, yet challenging to directions given by foreigners. In order to get them do what they are asked to, it's proven effective to express doubt about their technical expertise through subtle phrases that are used to nag their pride such as: "in the US people can replace the mechanical seal of a pump in less than 2 hours, it would be great to go back and tell them that Apizaco can do it in 15 minutes less and yet a great quality of the work is delivered". Innocent statements like the previous one can really get a mechanic motivated to show he is better and faster than any American mechanic. He'll do it to keep his honor intact. Once he proves that the job can be very well done in a short time, he has to acknowledge that this will be the new working standard upon which his performance

will be measured against. In IWS terms, this person can be recognized as a mechanical seals' expert and assigned to train his fellow workers to achieve the same level of expertise.

This same highly developed sense of pride is very helpful when it comes to the development of OPLs (One-Point Lessons, see an example in Appendix C). A big share of these OPLs is devoted to increase the knowledge and basic skills regarding the process. From the PM point of view, an OPL should teach how to prevent a certain failure from happening, from the AM one it should teach how to clean, inspect or lubricate a piece of equipment. Well, each member of the SWG (small working group) is supposed to generate a given number of OPLs per week or per month. Knowing that their OPLs will be subjected to the approval of the rest of his team they will do their best in order for their OPLs to the best ones, the ones that are most helpful. This increases the level of knowledge of the whole SWG, not only in terms of OPLs generation, but concerning all the information that they pretend to share through them. The technical level of the SWG is highly and positively impacted and this helps to implement some IWS standards in an easier and more effective way.

Last but not least it is worth mentioning that knowing that mechanics and electricians are usually paid better than operators, the latter will do everything possible to develop their mechanical or electrical skills hoping to climb to these positions sooner or later. The area greatly benefits from this way of thinking because their skills level increases considerably and they get to know the equipment better. What they don't know is that it is the mechanic or the electrician who should rather learn how to operate because those positions tend to disappear under the expectations of AM that clearly state that the operators should be perfectly able to perform the equipment maintenance (with very few exceptions). So, all of a sudden there is a lot of people learning how to pull out shafts and

bearings, how to calibrate a valve or simply how to put packing into a pump to stop the leakage. This desire to increase the paycheck amount helps to increase the technical expertise of the area as IWS pretends, of course, while following its tools and methods to do so.

9.6 Conclusions and Recommendations

This research project shows that there is so much more to a technology transfer process than just signing a business contract. All the major competitive advantages that a company has or believes to have may see themselves vanish in a few days if the necessary precautions are not taken when engaging into such a process.

In this effort to achieve very specific IWS goals in a technology transfer process, there are many issues to consider and that need to be included in future decision-making processes for a similar matter, such as the cultural characteristics of the host region, in this case, Tlaxcala. The people natives of this region are hard to convince by foreigners due to historical events that deeply marked their interaction with the latter. This makes more difficult to try and implement foreign standards of a foreign company under foreign people's direction.

Once the company is aware of this it has to develop clear and effective action plans to minimize the effect of the cultural clash. This is by no means an easy task. It requires the participation of members of all levels of the organization in order for the effort to be as comprehensive as possible. The work to be done has to really focus on a culture change, one that is gradual but consistent and dynamic. Today, this particular site is ready to move on to the second phase of IWS which means that an outstanding effort has been made to

take all the pillars resources into every aspect of the business; it means that IWS is part of every member of the organization and that there is documented evidence of this, in the form of QA, AM, PM, HS&E audits or FI case studies. Not all of A&B's manufacturing facilities in Mexico have reached yet to this level so this is a major reason of pride for the plant leadership team that has taken this site from a mere acquisition to a benchmark reference in many IWS and business aspects.

It was already mentioned that all the eight IWS pillars must be actively engaged in this effort, which can be easily demonstrated through actions such as the following:

1) **AM**.- it provides a strong leadership in and around defects identification and elimination, as well as visual controls implementation. It has to push the teams to develop and implement from the beginning a CIL (Cleaning, Inspection and Lubrication) chart in which the schedule detailing the frequency of such activities must be clearly defined with specific tasks and who is responsible for them. This helps to get to know the equipment under the principle of "cleaning=inspection=technical mastery". This pillar will have to provide the audits and auditors for Steps 0, 1 and 2 in order to deliver the equipment in Step 3.
2) **PM**.- it will have to validate all the AM visual controls according to the global standard of color codes, materials and sizes. It will have to make sure that all the equipments' birth certificates are issued and filed in their respective med-files. These files contain all the technical specifications: name, model, capacity, operating parameters, material, etc. One can also find a copy of the instructions manual and a detailed log of every single intervention that is made to the machine in order to keep track of who is doing what and when. The analysis of such information will help develop preventive or predictive maintenance action plans to be executed when the

moment comes. One of the most important roles of PM in a technology transfer project is that it has to make sure that all the spare parts for every piece of equipment are available on site or at the supplier's nearest location.

3) **QA**.- this pillar has to validate all the project in terms of how it will affect the product that is finally issued to the consumer. If the project requires the addition or retirement of chemicals, for example, QA will have to authorize such changes after a thorough series of tests. QA will also check that all the records are properly kept in order to be able to track down any single action taken during the project if necessary to solve a quality incident. It will make sure that if needed, the area has enough and certified laboratory human resources that will be able to determine if the quality criteria is met after start-up, in other words, they will have to issue the "pass" or "no pass" call.

4) **FI**.- this particular pillar is very helpful in terms of its strong leadership into eliminating all kinds of losses, particularly those involved with the technology transfer project. Through an FI approach thousands of dollars can be saved with the help of a small focused team that is composed of people from different areas of the site in order to minimize what is known as "workshop blindness", which means that after a while, a person that constantly sees a defect, ends up not seeing it anymore as such and thus doing nothing to correct it. FI cases are to be duly documented to serve as examples to the rest of the organization. An FI case is based upon analytical methods that pretend to identify and eliminate the root cause for a given issue, this is done through why-why analyses, fishbone or Pareto charts, etc.

5) **HS&E**.- although its role may appear obvious, this pillar will not only have to strive to achieve a zero incidents/accidents outcome, but it will also have to ensure

that the overall risks involved with the project are assessed and that an action plan is created for each one of them. This is done through an ORA (Overall Risk Assessment) which helps identify risks related with all aspects of the project, from shipping and handling risks to those actually involved with installation, construction and start-up. The pillar must supply all the necessary forms and formats to be filled out for safety purposes, such as the safety permits, the incident report forms, the daily PPE (personal protective equipment) audits, etc.

6) **IM**.- this is the pillar that gives birth to any new project on the site, it starts all up and it certainly has to be the one that calls it a success or a failure and has to be held accountable for it. The project belongs to IM until it finally delivers it to the Production department. All through the project it will have to assist with R&D, engineering, construction, testing, etc. It is the main link with the supplier through the Purchases department. It has to be able to provide in short time all the necessary technical information for a given task in order to abide to the original project's schedule develops in conjunction with all the departments involved.

7) **A&S**.- this pillar must make sure that all the DMS (Daily Management Systems) are used and followed closely all through the project. It also has to satisfy all the necessary media and computer needs of the project team through the IT (Information technology) department. It will assure the project team that the storeroom is in perfect order to avoid any delays.

8) **E&T**.- this is a vital pillar for the survival of the site. It will provide all the necessary means in terms of times, locations and resources for the training sessions for the activities upon which the daily operations of the site depend on. It will coordinate the AM, PM, HS&E and QA trainings and will provide the

documentation tools for them: a skills matrix and a step-up card that have to be developed, the first one for every area, and the latter for every attendant to the session. It will also have to keep track of the attendance to such sessions and report it. Last but definitely not least, this pillar will have to certify all those who intend to participate as trainers, this is made through a training session in which they are required to perform as trainers for their fellow trainees and receive feedback to work around their flaws.

A representative of each pillar is defined as the "contact" for the project. He or she will be responsible for providing all the information and resources related to the pillar they represent. They need to be present during most of the pre start-up meetings in which their respective pillars may provide the solutions to many problems, or at least provide a recommend approach. The synergy that develops between pillars and site departments is essential to achieve the IWS goals that the organization expects.

At the time this case-study is being written, the technology transfer project has not yet be fully delivered, it actually hasn't yet be handed on to the production department but most of the technology transfer process has been finished whatsoever. Nevertheless, it is of great importance to mention that the losses due to technical and cultural factors weren't as small as the company expected. Every day that the machine was down represented over one hundred thousand dollars worth of production and the parent rolls that PM 7F couldn't provide had to be imported at a cost 25% higher than home made ones. Due to technical difficulties that arose from design flaws and miscommunication during that stage, the start-up of the rebuilt machine was delayed two weeks and it hasn't yet achieved its production target. According to the Finance department, the total cost of the project will be nearly 1.5

times what was originally expected due to this delay, one that could and should have been prevented with the help of the 8 IWS pillars.

One of the main recommendations to be issued is that the design team must include at least one operating technician that will be able to provide actual feedback around things related to daily operation of the machine, he would be very helpful from the AM standpoint, he would definitely be able to identify hard to reach areas for cleaning, lubrication or maintenance purposes, and they could be corrected on the blueprint before actually going to the manufacturing department and then with the absolute need to fix the problem once the machine is installed.

A second recommendation would be to make sure that all little mistakes in the mechanical drawings are corrected as soon as possible in order to avoid these mistakes from being carried on into the next version of the drawing. This project showed how not having that done at the appropriate moment has catastrophic results that cost thousands of dollars in rework and delays.

A third is to provide the team project with at least one full time professional interpreter that eases the communication process between people that speak different languages. Lots of misunderstandings can be avoided, again, saving time and money to the company.

As a fourth recommendation, the cultural characteristics of Tlaxcala's people have to be considered as a major impact issue in the success of any project of this kind, especially one in which there will be a lot of interaction with the equipment by the operators. Their acceptance or reluctance to work in and around IWS principles has to be considered as a determining factor for the accomplishment of IWS goals. Obviously they will have no other choice than doing it, but the quality of their work will be seriously

affected by how convinced they are of why they are doing it. Therefore, it is strongly suggested that a group of locals is trained to be the main contacts with the operators in terms of IWS standards implementation. It is going to be so much easier for them to trust him or her and to follow instructions. Of course, this group of locals must be selected based on strong personal leadership characteristics, a dynamic and growth-eager personality as well as effective communication skills. This group can be sent to visit other sites in Mexico and abroad to get a clearer picture of how IWS works in older A&B sites. This way they can come back and share their vision with their fellow workers, they can then enable them with the experience they obtain from these trips and they can get everybody to start working with all the energy they are willing to transmit to their teams. This will be an actual proof of their leadership.

The only way for a company to survive nowadays is to achieve the lowest possible manufacturing costs and this will not be done until all little diamonds are picked up from the floor. These diamonds represent all those small, medium and large losses that surround us everyday in the shop floor, there's workshop blindness to many of them already but there will always be a pair of fresh eyes that will remind us of their existence. All these losses are real treasures that we will be able to turn into cash, cash that will eventually and most likely turn into technology-improving investing projects which will in turn provide better working and operating conditions that will motivate people to do a still better job.

IWS helps to do precisely that, no matter if it is a 25-year old paper machine or a brand new one, the approach is the same, the methodology has been established, all the company needs is commitment from its own people and results will quickly be seen.

The author wishes to thank all the technical and administrative staff of the site where
this research project took place for their kind support and cooperation into its completion.