6. CAD SOFTWARE

CAD is a really useful tool for every engineer, and especially for all the designers. Not only because it makes drawing easier, but because it presents the advantage that if any detail of the drawing needs to be changed, it can be done easy. Some softwares of CAD present the advantage that to change any dimension in the design, it can be done, and all the modifications are done by the computer. These softwares are known as parametric. It represents a big help, not only because of the drawing in two dimensions, but because three-dimensional elements can be drawn with certain ease, and taken as solids. These solids can be exported to other types of software for a more specific analysis, like in the case of Finite Element Analysis, or for Computer Assisted Manufacturing.

The Computer Aided Drawing started a few years, and it has evolved into very sophisticated softwares. At the beginning, designers did not know what to expect of these softwares, and they were not commonly used. But as time passed, more and more engineers realized the powerful tool that it represented, and started using it more. First, CAD was only used for two-dimensional drawing. Then, as technology advanced, and as engineers demanded, CAD softwares started including special packages for three-dimensional drawing. Nowadays, there are very complex softwares of CAD, which not only include the interface of the drawing, but they include manufacturing interface, finite element analysis interface, among others.

The CAD softwares can be used to generate models with most or all of the characteristics and features of one specific model or product, as seen in Figure 32. A very important advantage is that the model can have the same dimensions and the same characteristics that in real life. Once this informational data have been introduced in the computer, including everything the designer needs, then the designer can manipulate or modify the ideas with a greater ease in order to advance faster to develop the product. Another advantage is that the ideas of many designers can be combined and integrated into one only archive. These designers can be in the same place, and pass the information through CD's, or they can be in different parts of the world, and be connected by an informational web, and they would be working as a team.

Figure 32

Some CAD softwares allow engineers to test and run the product before manufacturing it. This way, they would be simulating the performance of the product,

knowing how would it behave under certain specific conditions, and if they need to make any modification in order to resist that conditions. This creates a saving in time and in money, which is one of the things that nowadays companies look for: to spent less money and to create products with high quality in the shortest time possible. For example, in Figure 33 it can be seen that a model has been created, and then, when engineers decided to make any change, it can be done with an optical pencil, which allows modifying any characteristic of the model or the product.

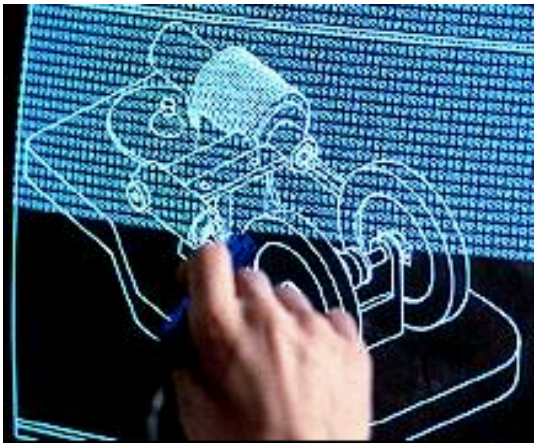

Figure 33

There are many kinds and variations of this software, but one of the most important, because of the complexity of the processes that it includes, is the Pro-Engineer Software (Pro-E).

6.1 Pro-Engineer

As said, Pro-E is one of the most complete softwares that exist in the market nowadays. Not only because of the ease of use, but because it allows to perform other things than only drawing. One of the biggest advantages of this software is that it is a parametric software, which means that when an engineer modifies one feature, it

automatically modifies all the other features, not like AutoCAD, in which a single modification implies a modification of all the drawing by the designer.

Among all the advantages of this software, is that once the digital product is designed in 3D, it can be exported to other CAD softwares, or to other software for its proper analysis. It also accelerates the creation of any model with independence of its complexity, assuring that the capacity of the computer would not fail. This software assures that the changes in the digital model would propagate all over the life cycle of the digital product, and allows the proper use of time and money by automating the generation of elements. It increases the quality of the model and the reutilization of pieces while the errors in the models are decreased. And finally, it reduces the costs caused by the lack of compatibility of the data.

"Pro/ENGINEER combines a proven depth and breadth of capabilities with an innovative new user model that redefines ease-of-use." (Internet). It is one of the easiest CAD softwares to use, not only because of the features or the friendly environment that it offers, but because it contains a web of communication with other computer aided softwares, suppliers, manufacturers, and with people of the same company all over the world. It is really simple, but provides the power to handle the most challenging designs (see Figure 34).

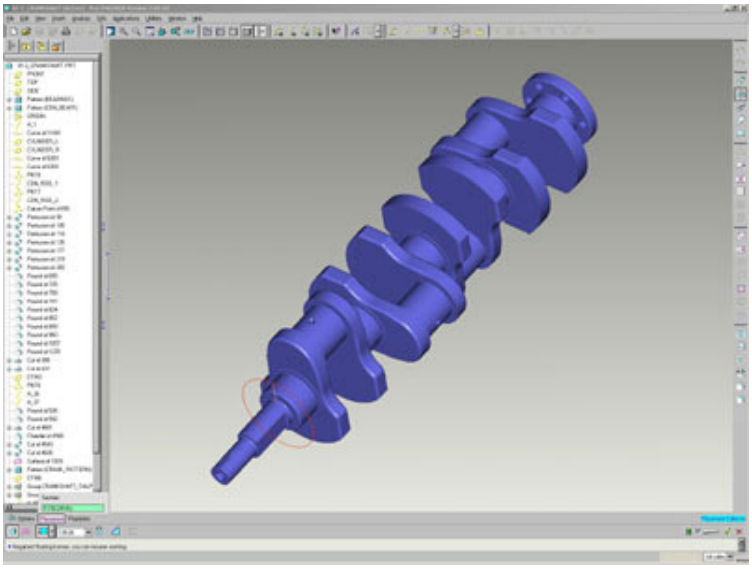

Figure 34

6.1.1 Solid Modeling

"'Solid Modeling' is a method used to design parts by combining various 'solid objects' into a single three-dimensional (3D) part design. Originally, solid modelers were based on solid objects being formed by primitive shapes such as a cone, torus, cylinder, sphere, and so on. This evolved into solid objects being created and formed from swept, lofted, rotated, and extruded 2D wireframe or sketch geometry." (Internet)

Solid modeling is one of the most important things to do in order to develop this thesis adequately. Even if some solids can be created in Algor, the interface that it uses is very complex, and as a consequence difficult to handle. But Algor presents the advantage of allowing people to import solids or surfaces from other softwares, such as Pro-Engineer. For the first analyses of this thesis, Algor will be used to model the solids, because of the low complexity that they present, but as it advances, the solids are going to be more complex every time, and the software that it is going to be used to model them is Pro-E.

The first option to make the solids, even if they were easy to model, was AutoCAD. But the problem is that the way of exporting the solids to other softwares is iges, and Algor does not open that type of archives when they come from AutoCAD. Then, the models were created on Pro-E, and saving them as surfaces in iges, the exportation finally was successful.

The basic commands in Pro-E to create solids are: protrusion, hole, round, chamfer, cut, rib, shell, pipe and tweak. Every command asks for specific information, but the first step is to create the basis of the solid, and that is done with the command protrusion. Once this is done, then with the other commands one can add or subtract elements of the solid, giving shape little by little to the final solid. For example, for the first analyses of this thesis, a specimen has to be modeled. The first step to follow is to extrude a circle of the diameter required, in this case 10 mm. So once the axis is chosen, the circle has to be drawn. Then, it has to be accepted, and the option blind has to be selected. This will allow the designer to specify how long the specimen is going to be. Once the length is specified, the last step to do is to accept all the information given, and a solid like that in Figure 35 will be the result.

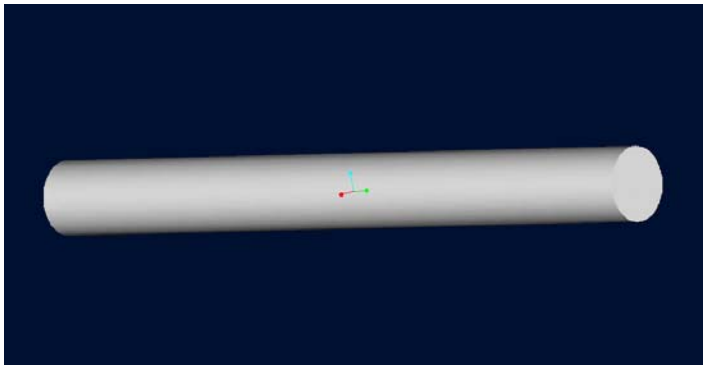

Figure 35

After the main solid is modeled, the next step is to add or to subtract all the solids necessary to achieve the final element. For this case, the specimen has to have a notch in the middle for the first analysis, and then, it has to have one notch at each side of the central notch, and at the same distance. Then, for other analysis, the notches have to remain away from the central notch, but each time they will be farter and farter, until reaching one specific point. This is one advantage of using Pro-E, because as stated before, it is a parametrical software that allows to change only the distance of the side notches to the central notch, and it automatically regenerates the drawing, avoiding the need to model another different solid. The first model will be like Figure 36.

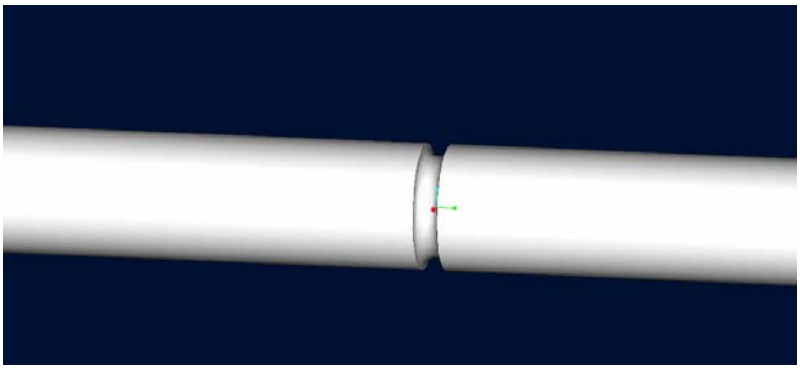

Figure 36

Then, the other models are like the one in Figure 37, where it has one notch on each side of the central notch. As the analysis advances, the notches are getting farter.

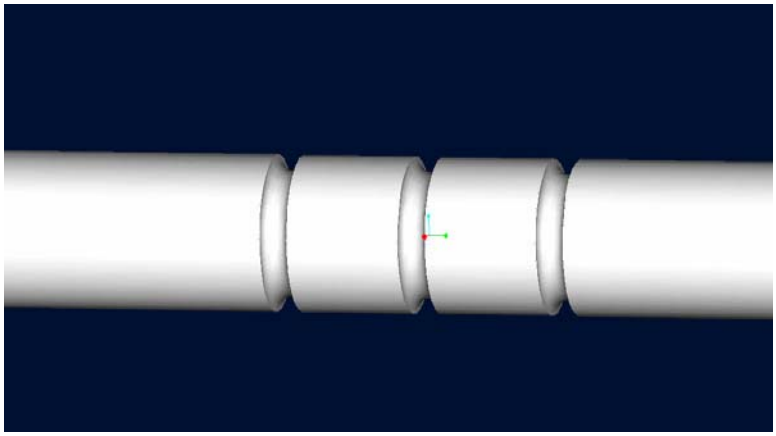

Figure 37

As seen, solid modeling is a very important tool to use, not only to develop this thesis, but to develop every single project that involves design. The solid modeling explained here is very basic, but there are other things that can be done such as assemblies of different mechanical parts. It represents not only a useful tool to draw, but also a useful tool to make assemblies, and to make other type of analyses, as said before, such as finite element analysis, manufacturing analysis, assemblability, etc.

Other advantages of solid modeling in Pro-E, is that the isometric drawing can be created easily and automatically by the software. There is no need for the designer to create another drawing, and this makes it less prone to mistakes. Another advantage, in the case that the solid wants to be manufactured, is that the software can create the CNC code, and transfer it to the machine, creating an automation of the process, which saves time and money.