Digilent, Inc.
125 SE High Street
Pullman, WA 99163
(509) 334 6306 (Voice and Fax)
www.digilentinc.com

PRELIMINARY

Digilab DIO1 Reference Manual

Revision: May 7, 2002

Overview

The Digilab Digital I/O board 1 (DIO1) is one of several expansion boards designed to mate with Digilab system boards. The DIO1 is an inexpensive board that contains an assortment of basic digital I/O devices, including buttons, switches, and several LED displays. The DIO1 board can be combined with Digilab system boards to provide a source of ready-made I/O devices, allowing a wide range of projects to be implemented without the need for any other components.

DIO1 board features include:

- A four digit seven-segment LED display;
- 8 individual LEDs;
- A 3-bit VGA port;
- 4 momentary pushbuttons;
- 8 slide switches;
- A PS2 mouse/keyboard port.

Functional description

The DIO1 board has been designed to provide a basic, inexpensive platform that contains many

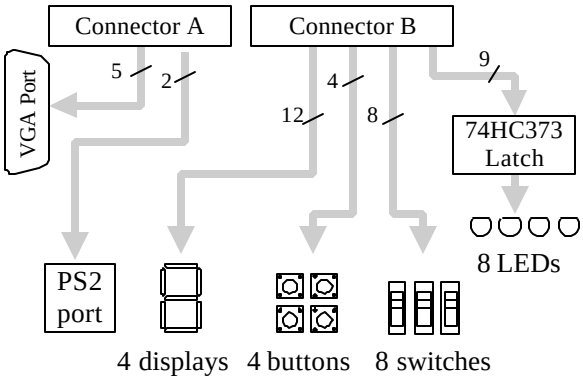

Figure 1. DIO1 schematic

of the I/O devices commonly found in digital systems. Unlike the more advanced DIO2 board, the DIO1 board has been designed so that all signals pass directly to an attached system board, so no intermediate logic is required. When mated with a Digilab system board, the DIO1 board can provide a flexible prototyping system that can be operational immediately.

Copyright Digilent, Inc. All rights reserved

Signals

All named signals used on the DIO1 board are defined in the table on the right. Voltage levels for all signals arriving from an attached Digilab system board are determined by the system board, but all signals arising on the I/O board derive from the on-board 5VDC regulator (so they are all 5V CMOS signals).

The DIO1 board uses a two-layer process, so all signals are available on the top and bottom layers. Many signals are brought to a test point header for easy test and measurement equipment attachment.

Power Supplies	
VU	Unregulated power supply voltage from attached system board – typically 5-9VDC. Although connected to the board, this supply is not used on the DIO1 board.
VDD33	Regulated power supply voltage (3.3VDC) from attached system board. All devices on DIO1 board use this supply.
GND	System ground
VGA signals	
HS	VGA Horizontal Sync signal
VS	VGA Vertical Sync signal
R	VGA 1-bit red data
G	VGA 1-bit green data
B	VGA 1-bit blue data
PS2 signals	
KCLK	PS2 (Keyboard or Mouse) clock signal
KDAT	PS2 (Keyboard or Mouse) data signal
Input devices	
BTN1-4	Pushbuttons 1 through 4
SW1-SW8	Slide switches 1 through 8
Output devices	
LD0-LD8	Discreet LEDs 1 through 8
CA-CF	Seven-segment display cathodes
AN1-AN3	Seven-segment display anodes

Table 1. DIO1 board signal definitions

Power Supply

The DIO1 board receives system power from pins 39 and 37 of connectors A and B (which mate to pins 1 and 3 of an attached system boards). Pin 37 provides Vdd from the attached system board (assumed to be 3.3VDC), and pin 39 is connected to ground. Up to 5VDC can be safely applied to the Vdd input pin (pin 37). The DIO1 board typically consumes less than 10mA with no LED's illuminated, and up to 130mA with all LEDs illuminated (including all segments of the seven-segment display).

LEDs

Eight LEDs are provided for circuit outputs. The LED cathodes are tied to ground via 270-ohm resistors, and the anodes are driven from the 74HC373 (so the LED drive signals are active high).

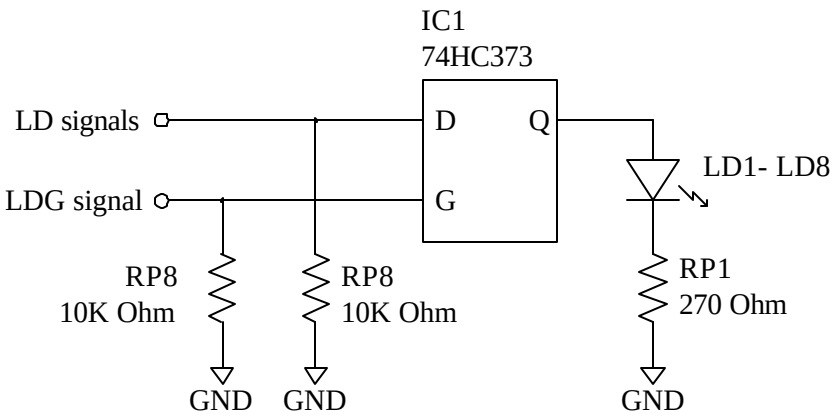

Seven-segment LED display

The DIO1 board contains a modular 4-digit, common anode, seven-segment LED display. In a common anode display, the seven anodes of the LEDs forming each digit are connected to four common circuit nodes (labeled AN1 through AN4 on the DIO1 board). Each anode, and therefore each

digit, can be independently turned on and off by driving these signals to a '1' or a '0'. The cathodes of similar segments on all four displays are also connected together into seven common circuit nodes labeled CA through CG. Thus, each cathode for all four displays can be turned on and off independently.

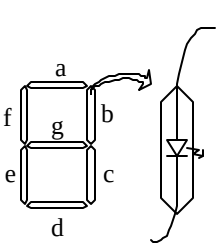

(a)

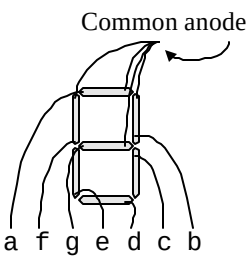

(b)

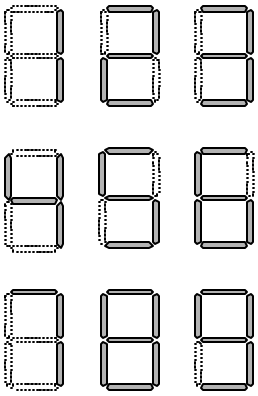

(c)

Digit Shown	Illuminated Segment a	b	c	d	e	f	g
0	1	1	1	1	1	1	0
1	0	1	1	0	0	0	0
2	1	1	0	1	1	0	1
3	1	1	1	1	0	0	1
4	0	1	1	0	0	1	1
5	1	0	1	1	0	1	1
6	1	0	1	1	1	1	1
7	1	1	1	0	0	0	0
8	1	1	1	1	1	1	1
9	1	1	1	1	0	1	1

(d)

Figure 4. (a) Seven segment display detail. (b) common anode display configuration. (c) segement illumination patterns for decimal. digits. (d) segment illumination truth table.

This connection scheme creates a multiplexed display, where driving the anode signals and corresponding cathode patterns of each digit in a repeating, continuous succession can create a 4-digit display. In order for each of the four digits to appear bright and continuously illuminated, all four digits should be driven once every 1 to 16ms (for a refresh frequency of 60Hz to 1KHz). For example, in a 60Hz refresh scheme, each digit would be illuminated for ¼ of the refresh cycle, or 4ms. The controller must assure that the correct cathode pattern is present when the corresponding anode signal is driven. To illustrate the process, if AN1 is driven high while CB and CC are driven low, then a "1" will be displayed in digit position 2. Then, if AN2 is driven high while CA, CB and CC are driven low, then a "7" will be displayed in digit position 2. If AN1/CB, CC are driven for 4ms, and then AN2/CA, CB, CC are driven for 4ms in an endless succession, the display will show "17" in the first two digits. An example timing diagram is provided to the right.

Anodes -- connected to CPLD via transistors for greater current

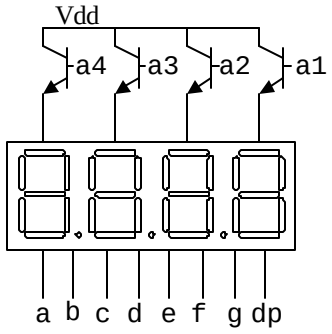

Cathodes -- connected to CPLD pins via 100 Ω resistor

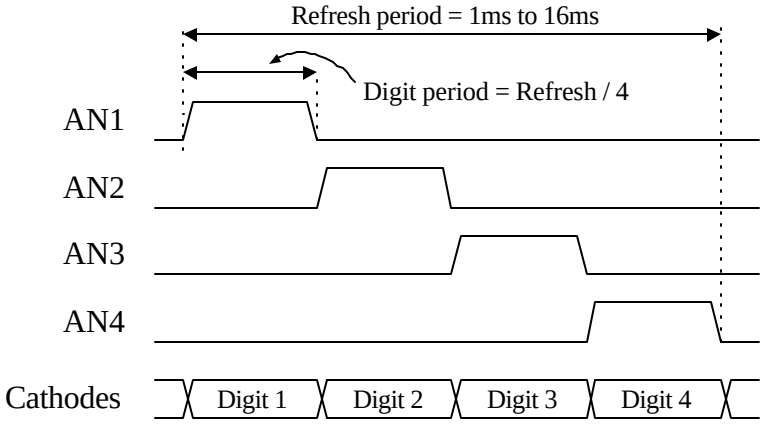

Seven segment display refresh signals and timings

Pushbuttons

Outputs from the 4 momentary-contact push buttons are normally low, and are driven high only while the button is actively pressed. The buttons exhibit a worst-case bounce time of about 1ms. A 4.7K series resistor provides some debounce filtering and ESD protection. The button outputs are brought out directly to pins on interface connector B.

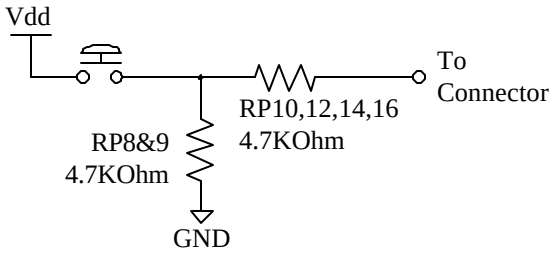

Switches

The eight slide switches can be used to connect either Vdd or GND to eight pins on interface connecter B. The switches exhibit about 2ms of bounce, and no active debouncing circuit is employed. A 4.7K-ohm series resistor is used for nominal input protection.

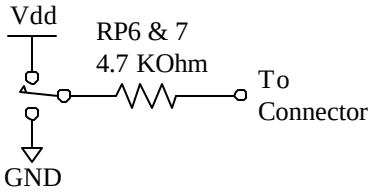

PS2 port

The DIO1 board includes a 6-pin mini-DIN connector that can accommodate a PS2 mouse or PS2 keyboard connection. Both the mouse and keyboard use a two-wire serial bus (including clock and data) to communicate with a host device, and both drive the bus with identical signal timings. Both use 11-bit words that include a start, stop and odd parity bit, but the data packets are organized differently, and the keyboard interface allows bi-directional data transfers (so the host device can illuminate state LEDs on the keyboard).

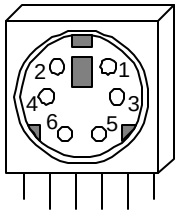

PS2 Connector front view

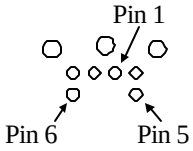

Bottom-up hole pattern

PS2 Pin Definitions

Pin	Function
1	Data
2	Reserved
3	GND
4	Vdd
5	Clock
6	Reserved

Bus timings are shown below. The clock and data signals are only driven when data transfers occur, and otherwise they are held in the "idle" state at logic '1'. The timings define signal requirements for mouse-to-host communications and bi-directional keyboard communications.

Symbol	Parameter	Min	Max
T_{CK}	Clock time	30us	50us
T_{SU}	Data-to-clock setup time	5us	25us
T_{HLD}	Clock-to-data hold time	5us	25us

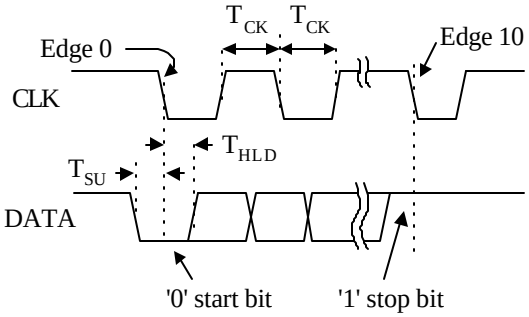

Keyboard

The keyboard uses open collector drivers so that either the keyboard or an attached host device can drive the two-wire bus (if the host device will not send data to the keyboard, then the host can use simple input-only ports). The clock and data signals (PS2C and PS2D) are connected directly to pins on the B connector.

A PS2-style keyboard uses scan codes to communicate key press data (nearly all keyboards in use today are PS2 style). Each key has a single, unique scan code that is sent whenever the corresponding key is pressed. If the key is pressed and held, the scan code will be sent repeatedly once every 100ms or so. When a key is released, a "F0" key-up code is sent, followed by the scan code of the released key. If a key has a "shift" character that is different than the non-shift character, the same scan code is sent whether the shift key is pressed or not, and the host device must determine which character to use. Some keys, called extended keys, send an "E0" ahead of the scan code (and they may send more than one scan code). When an extended key is released, a "E0 F0" key-up code is sent, followed by the scan code. Scan codes for most keys are shown in the figure below.

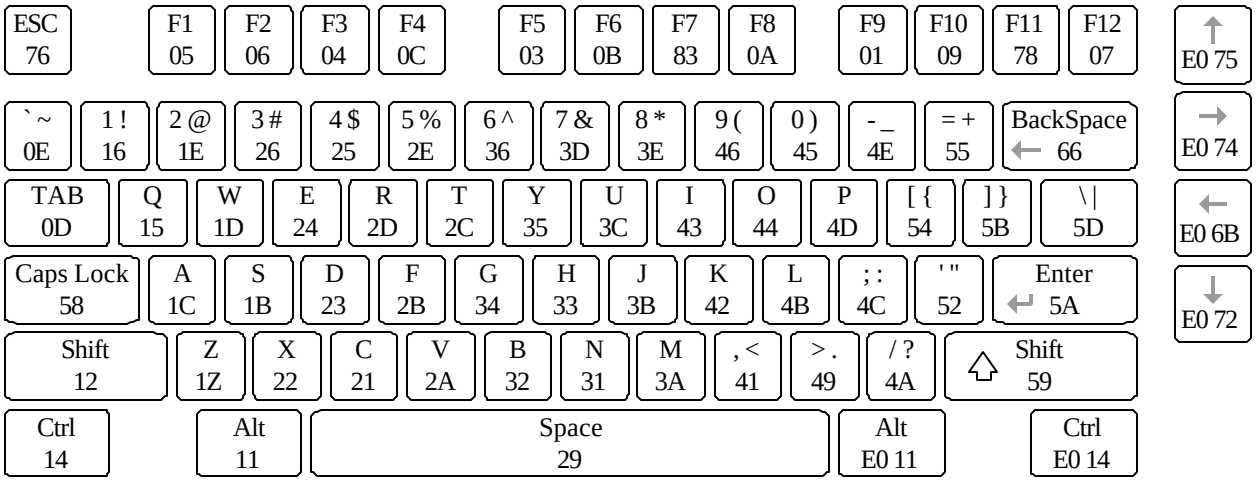

A host device can also send data to the keyboard. Below is a short list of some often-used commands.

ED Turn on/off Num Lock, Caps Lock, and Scroll Lock LEDs. The keyboard acknowledges receipt of an "ED" by returning an "FA", after which the host send another byte to set LED status: Bit 0 sets Scroll Lock; bit 1 sets the Num Lock; and Bit 2 sets Caps lock. Bits 3 to 7 are ignored.
EE Echo. Upon receiving an echo command, the keyboard replies with the same scan code ("EE").
F3 Set scan code repeat rate. The keyboard acknowledges receipt of an "F3" by returning an "FA", after which the host sends a second byte to set the repeat rate.
FE Resend. Upon receiving a resend command, the keyboard will re-send the last scan code sent.
FF Reset. Resets the keyboard.

The keyboard should send data to the host only when both the data and clock lines are high (or idle). Since the host is the "bus master", the keyboard should check to see whether the host is sending data before driving the bus. To facilitate this, the clock line can be used as a "clear to send" signal. If the

host pulls the clock line low, the keyboard must not send any data until the clock is released (host-to-keyboard data transmission will not be dealt with further here).

The keyboard sends data to the host in 11-bit words that contain a '0' start bit, followed by 8-bits of scan code (LSB first), followed by an odd parity bit and terminated with a '1' stop bit. The keyboard generates 11 clock transitions (at around 20 - 30KHz) when the data is sent, and data is valid on the falling edge of the clock.

Mouse

The mouse outputs a clock and data signal when it is moved; otherwise, these signals remain at logic '1'. Each time the mouse is moved, three 11-bit words are sent from the mouse to the host device. Each of the 11-bit words contains a '0' start bit, followed by 8 bits of data (LSB first), followed by an odd parity bit, and terminated with a '1' stop bit. Thus, each data transmission contains 33 bits, where bits 0, 11, and 22 are '0' start bits, and bits 11, 21, and 33 are '1' stop bits. The three 8-bit data fields contain movement data as shown below. Data is valid at the falling edge of the clock, and the clock period is 20 to 30KHz.

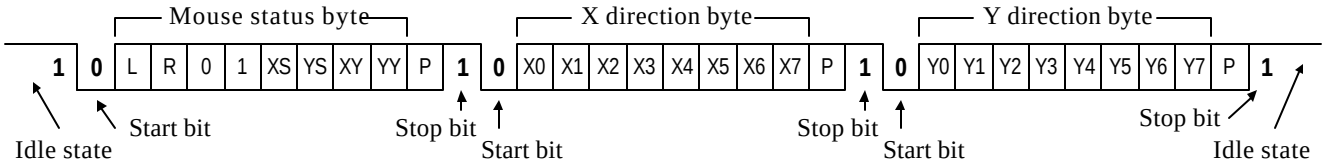

The mouse assumes a relative coordinate system wherein moving the mouse to the right generates a positive number in the X field, and moving to the left generates a negative number. Likewise, moving the mouse up generates a positive number in the Y field, and moving down represents a negative number (the XS and YS bits in the status byte are the sign bits – a '1' indicates a negative number). The magnitude of the X and Y numbers represent the rate of mouse movement – the larger the number, the faster the mouse is moving (the XV and YV bits in the status byte are movement overflow indicators – a '1' means overflow has occurred). If the mouse moves continuously, the 33-bit transmissions are repeated every 50ms or so. The L and R fields in the status byte indicate Left and Right button presses (a '1' indicates the button is being pressed).

VGA port

The five standard VGA signals Red (R), Green (G), Blue (B), Horizontal Sync (HS), and Vertical Sync (VS) are routed directly from the A connector to the VGA connector. A series resistor is used on each color line to provide 3-bit color, with 1 bit each for Red, Green, and Blue. The series resistor uses the 75 ohm VGA cable termination to ensure that the color signals remain in the VGA-specified 0V – 0.7V range. The HS and VS signals are TTL level.

VGA signal timings are specified, published, copyrighted and sold by the VESA organization (www.vesa.org). The following VGA system and timing information is provided as an example of how a VGA monitor might be driven in 640 by 480 mode. For more precise information, or for information on higher VGA frequencies, refer to document available at the VESA website (or experiment!).

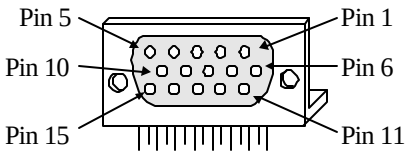

DB15 VGA connector
Front view

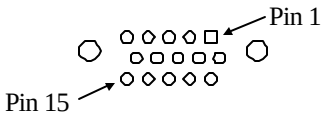

DB15 through-hole pattern as
seen from the top

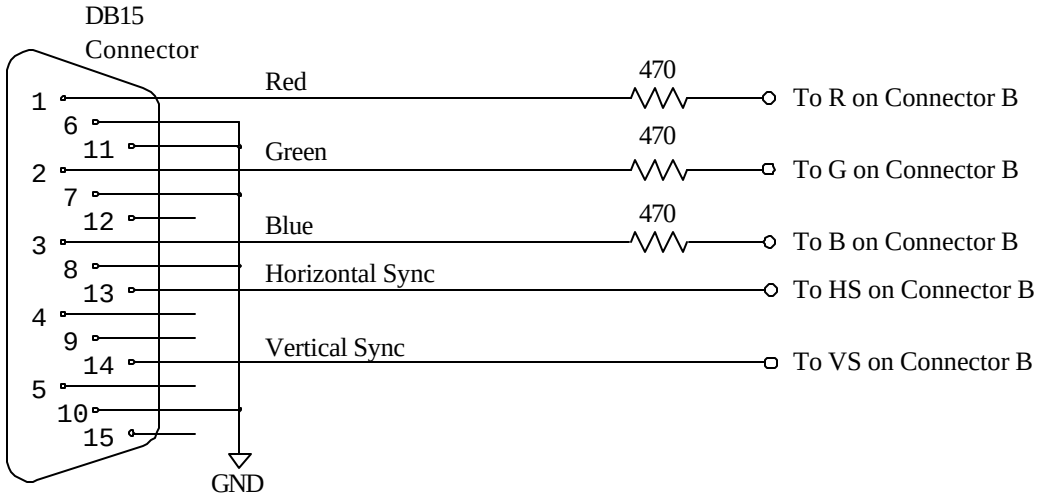

VGA systems and signal timings for a 60Hz, 640x480 display

CRT-based VGA displays use amplitude modulated, moving electron beams (or cathode rays) to display information on a phosphor-coated screen. LCD displays use an array of switches that can impose a voltage across a small amount of liquid crystal, thereby changing light permitivity through the crystal on a pixel-by-pixel basis. Although the following description is limited to CRT displays, LCD displays have evolved to use the same signal timings as CRT displays (so the "signals" discussion below pertains to both CRTs and LCDs).

CRT displays use electron beams (one for red, one for blue and one for green) to illuminate phosphor that coats the inner side of the display end of a cathode ray tube (see drawing below). Electron beams emanate from "electron guns", which are a finely pointed, heated cathodes placed in close proximity to a positively charged annular plate called a "grid". The electrostatic force imposed by the grid pulls away rays of energized electrons as current flows into the cathodes. These particle rays are initially accelerated towards the grid, but they soon fall under the influence of the much larger electrostatic force that results from the entire phosphor coated display surface of the CRT being charged to 20kV (or more). The rays are focused to a fine beam as they pass through the center of the grids, and then they accelerate to impact on the phosphor coated display surface. The phosphor surface glows brightly at the impact point, and the phosphor continues to glow for several hundred microseconds after the beam is removed. The larger the current fed into the cathode, the brighter the phosphor will glow.

Between the grid and the display surface, the beam passes through the neck of the CRT where two coils of wire produce orthogonal electromagnetic fields. Because cathode rays are composed of charged particles (electrons), they can be bent by these magnetic fields. Current waveforms are passed through the coils to produce magnetic fields that cause the electron beams to transverse the display surface in a "raster" pattern, horizontally from left to right and vertically from top to bottom. Information is only displayed when the beam is moving in the "forward" direction (left to right and top to bottom), and not during the time the beam is reset back to the left or top edge of the display. Much of the potential display time is therefore lost in "blanking" periods when the beam is reset and stabilized to begin a new horizontal or vertical display pass.

The size of the beams, the frequency at which the beam can be traced across the display, and the frequency at which the electron beam can be modulated determine the display resolution. Modern VGA displays can accommodate different resolutions, and a VGA controller circuit dictates the resolution by producing timing signals to control the raster patterns. The controller must produce TTL-level synchronizing pulses to set the frequency at which current flows through the deflection coils, and it must ensure that pixel (or video) data is applied to the electron guns at the correct time. Video data typically comes from a video refresh memory, with one or more bytes assigned to each pixel location (the DIO1 board uses 3-bits per pixel). The controller must index into video memory as the beams move across the display, and retrieve and apply video data to the display at precisely the time the electron beam is moving across a given pixel.

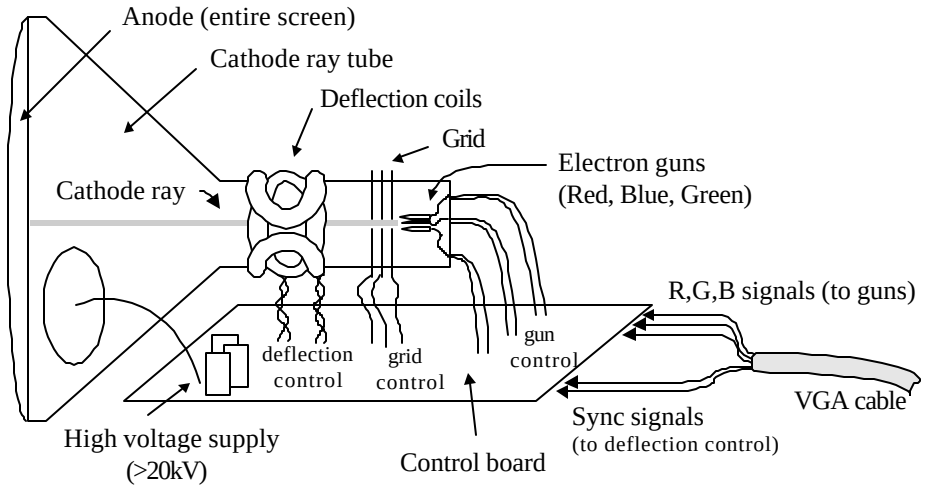

Cathode ray tube display system

The VGA controller circuit must generate the HS and VS timings signals and coordinate the delivery of video data based on the pixel clock. The pixel clock defines the time available to display 1 pixel of

information. The VS signal defines the "refresh" frequency of the display, or the frequency at which all information on the display is redrawn. The minimum refresh frequency is a function of the display's phosphor and electron beam intensity, with practical refresh frequencies falling in the 60Hz to 120Hz range. The number of lines to be displayed at a given refresh frequency defines the horizontal "retrace" frequency.

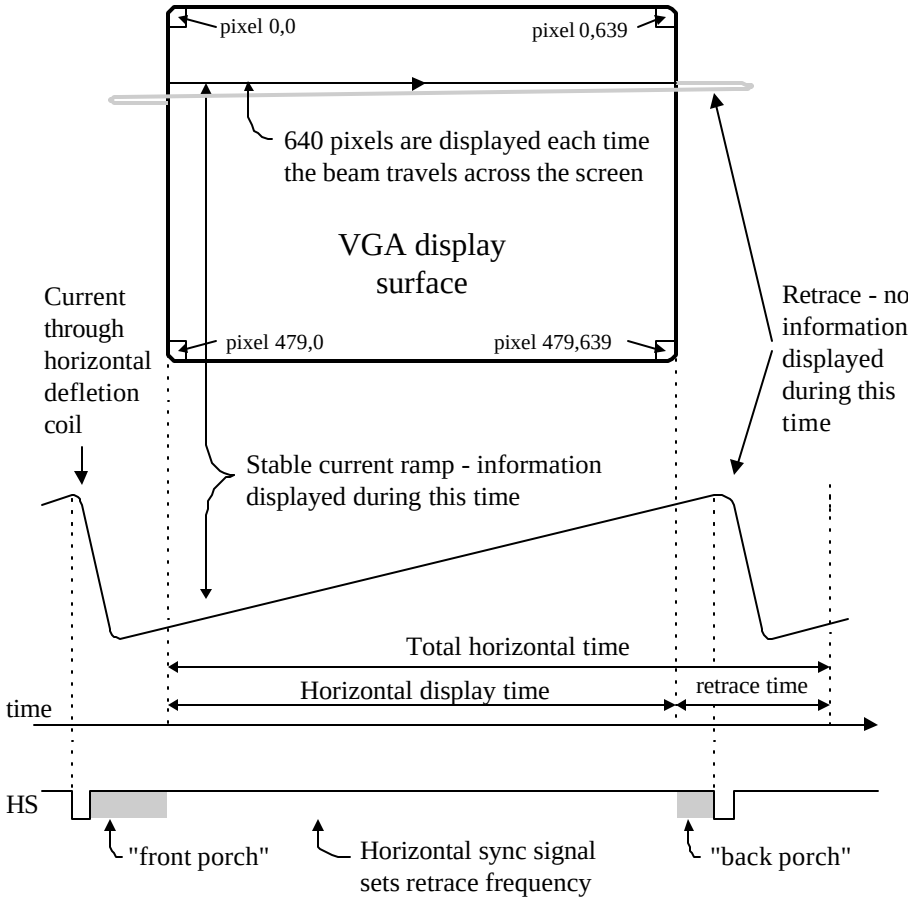

For a 640-pixel by 480-row display using a 25MHz pixel clock and 60 +/-1Hz refresh, the following signal timings can be derived. Timings for sync pulse width and front and back porch intervals (porch intervals are the pre- and post-sync pulse times during which information cannot be displayed) are based on observations taken from VGA displays.

VGA Signal Timing

Symbol	Parameter	Vertical Sync			Horizontal Sync	
		Time	Clocks	Lines	Time	Clocks
T_S	Sync pulse time	16.7ms	416,800	521	32 us	800
T_{disp}	Display time	15.36ms	384,000	480	25.6 us	640
T_{pw}	VS pulse width	64 us	1,600	2	3.84 us	96
T_{fp}	VS front porch	320 us	8,000	10	640 ns	16
T_{bp}	VS back porch	928 us	23,200	29	1.92 us	48

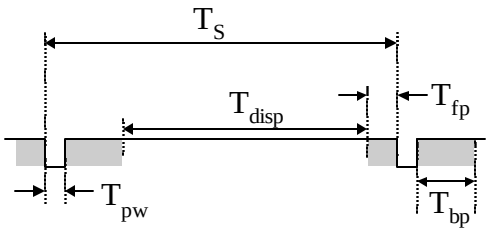

A VGA controller circuit decodes the output of a horizontal-sync counter driven by the pixel clock to generate HS signal timings. This counter can be used to locate any pixel location on a given row. Likewise, the output of a vertical-sync counter that increments with each HS pulse can be used to generate VS signal timings, and this counter can be used to locate any given row. These two continually running counters can be used to form an address into video RAM. No time relationship between the onset of the HS pulse and the onset of the VS pulse is specified, so the designer can arrange the counters to easily form video RAM addresses, or to minimize decoding logic for sync pulse generation.

Connector pinouts

The connector pinouts are shown below. Separately available tables show pass-through connections for the devices on the DIO1 board when the board is attached to various system boards – i.e., one table is available showing the FPGA connections to the DIO1 devices for a D2 system board, another table is available showing the FPGA connections for a D2E board, a third for the D2XL board, etc.

J2 (B) connector							
Pin	**Signal**	**Pin**	**Signal**	**Pin**	**Signal**	**Pin**	**Signal**
1	CA	11	CF	21	A1	31	n/c
2	SW1	12	SW6	22	LD1	32	LD6
3	CB	13	CG	23	A2	33	n/c
4	SW2	14	SW7	24	LD2	34	LD7
5	CC	15	DP	25	A3	35	n/c
6	SW3	16	SW8	26	LD3	36	LD8
7	CD	17	BTN2	27	A4	37	VDD33
8	SW4	18	BTN1	28	LD4	38	LDG
9	CE	19	BTN4	29	n/c	39	GND
10	SW5	20	BTN3	30	LD5	40	VU

J1 (A) Connector	
Pin	**Signal**
30	RED
32	GRN
33	PS2D
34	BLU
35	PS2C
36	HS
37	VDD
38	VS
39	GND
40	VU